Innovation in Patient Handling

Allegro
CONCEPTS PTY LTD

Manufacturers of Patient Lifting
and Handling Equipment

Allegro Concepts is committed to providing long term solutions for injury prevention. We are dedicated advocates of the 'no-lift policy' in manual handling. Our excellent range of patient lifting slings will work towards the elimination of injuries that result from patient lifting, transferring and re-positioning. Allegro Patient Lifting slings complement the Allegro range of Patient Lifters:

- Sonata 150
- Sonata 150 ELS
- Alto lift 200
- Salsa 200 Standing Transfer Hoist
- Whole Allegro Lite range

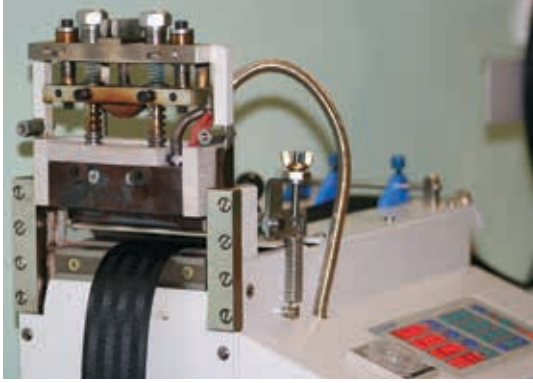

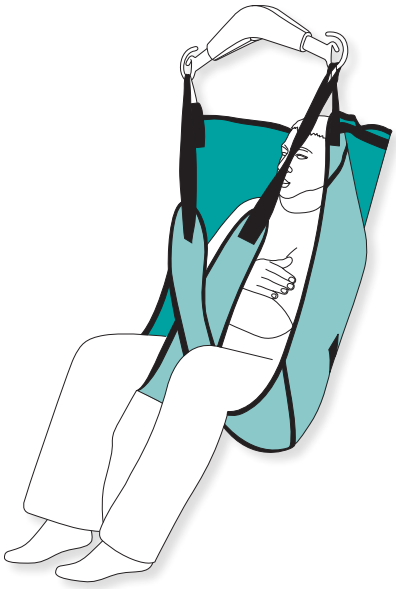

General Purpose Slings

Allegro General Purpose Slings are designed to be simple and safe to use for both home and institutional patient lifting. The slings are manufactured from polyester fabric or mesh (suitable for bathing) with internal padding in pressure areas and utilise webbing attachment loops. The webbing loops are colour coded for sizing to allow easy sling selection and identification.

Webbing loops of varying lengths are provided at each connection point to allow a lay back posture for the patient or, by using the shortest loops, a higher lift.

General Purpose Slings may only be applied to lifting hoists fitted with a yoke attachment. Yoke Attachments available in:

- 2 Hook

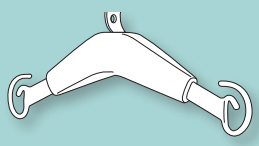

- Tri-hook

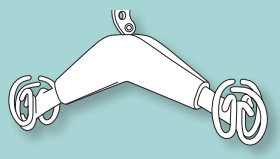

- 4 Hook

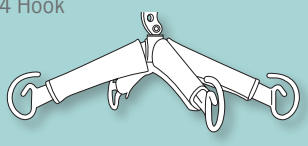

General Purpose Sling

Six sizes in fabric or mesh.

- Provides easy fitting and good support for patients with some upper body control.
- Recommended for general lifting.

	XS	S	M	L	XL	XXL
A	790	790	890	1110	1240	1400
B	210	230	240	260	270	290
C	470	460	530	650	730	750
D	1120	1130	1190	1390	1520	1590
FABRIC	GP01XS	GP01S	GP01M	GP01L	GP01XL	GP01XXL
MESH	GP02XS	GP02S	GP02M	GP02L	GP02XL	GP02XXL

YOKE ATTACHMENT (SPREADER BAR)

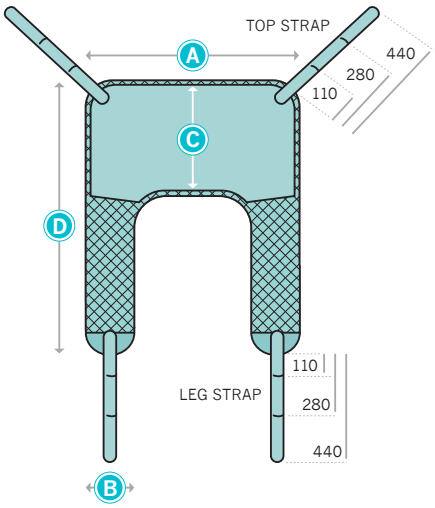

General Purpose Sling with head support

Six sizes in fabric or mesh.

- Sling is easily fitted to a patient in bed or a chair, providing excellent upper body and head support.
- Recommended for lifting from the floor and general lifting of the less secure patient.

	XS	S	M	L	XL	XXL
A	820	820	920	1110	1270	1360
B	210	230	240	260	270	290
C	750	780	920	1000	1020	1050
D	1310	1380	1410	1630	1680	1780
FABRIC	GPHS01XS	GPHS01S	GPHS01M	GPHS01L	GPHS01XL	GPHS01XXL
MESH	GPHS02XS	GPHS02S	GPHS02M	GPHS02L	GPHS02XL	GPHS02XXL

YOKE ATTACHMENT (SPREADER BAR)

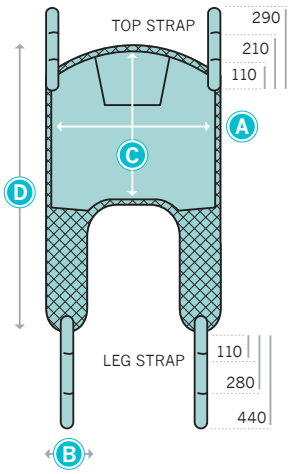

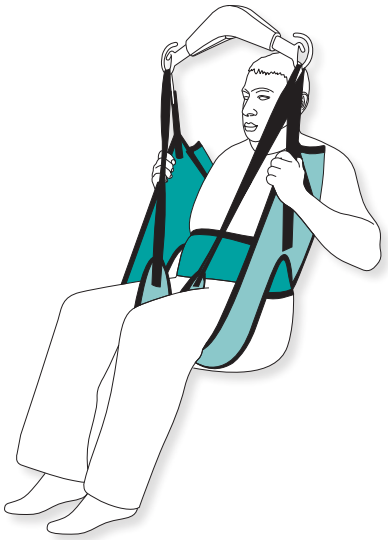

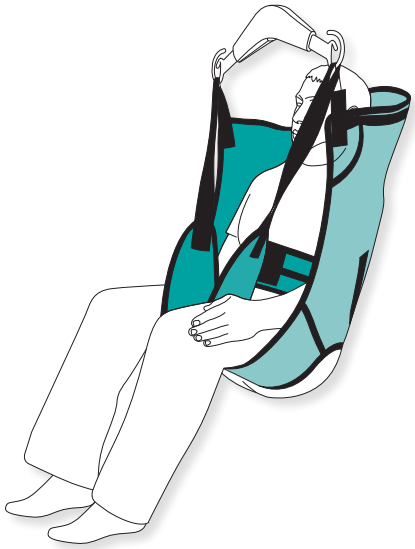

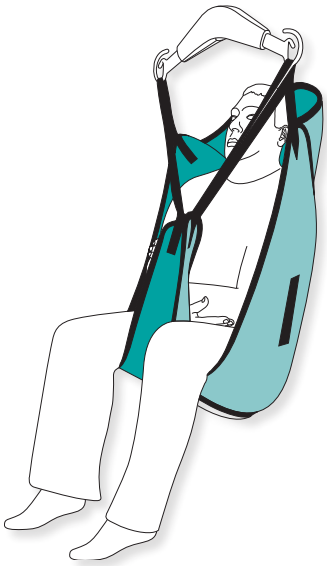

Care Sling

Three sizes in fully quilted fabric only.

- Excellent for transfers onto a toilet as it provides an open area from the middle of the back to the middle of the thigh.
- Recommended for general toilet transfers.

	S	M	L
A	750	910	990
B	150	160	160
C	330	340	350
D	830	1010	1080
T	1160	1400	1470
FABRIC	C01S	C01M	C01L

YOKE ATTACHMENT (SPREADER BAR)

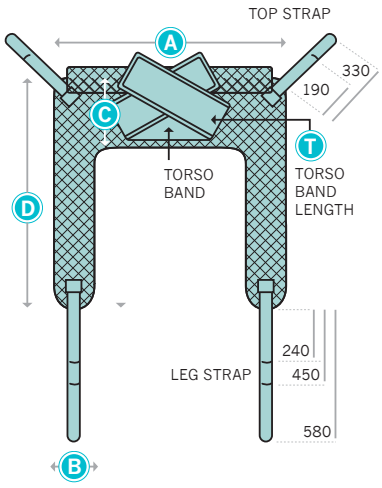

Care Sling with head support

Six sizes in fabric or mesh.

- Sling provides easy removal of clothing for toilet transfers.
- Recommended for general toilet transfers for the less secure patient.

	XS	S	M	L	XL	XXL
A	680	850	1020	1020	1200	1220
B	180	210	220	200	220	220
C	540	620	700	790	810	790
D	860	1180	1220	1380	1430	1460
T	970	1130	1220	1320	1420	1650
FABRIC	CHS01XS	CHS01S	CHS01M	CHS01L	CHS01XL	CHS01XXL
MESH	CHS02XS	CHS02S	CHS02M	CHS02L	CHS02XL	CHS02XXL

YOKE ATTACHMENT (SPREADER BAR)

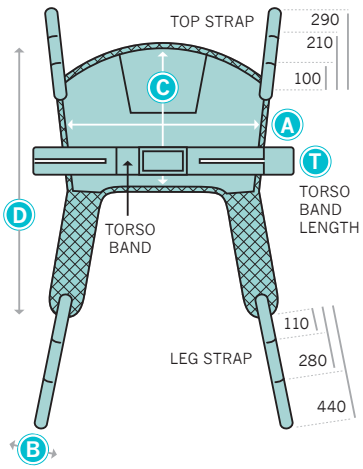

Junior Sling

Three sizes in mesh only.

- Provides easy fitting and good support for children or small adults.
- Removable bracing and gusseted base section provide maximum support.

	XS	S	M
A	590	710	760
B	110	120	120
C	710	920	930
D	1050	1240	1380
MESH	J02XS	J02S	J02M

YOKE ATTACHMENT (SPREADER BAR)

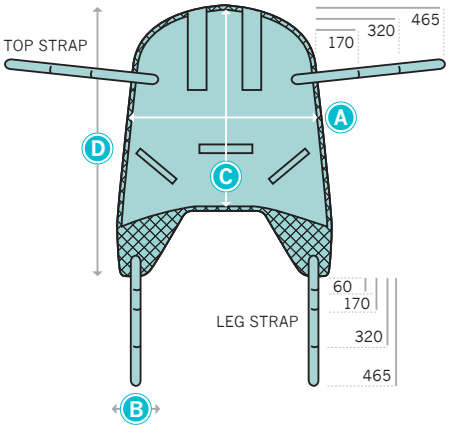

WARNING The Care Sling should only be used if the patient has sufficient trunk and upper limb control to maintain balance. The top of the sling must pass below the armpits to maximise stability. Excessive pressure under the armpits should be avoided.

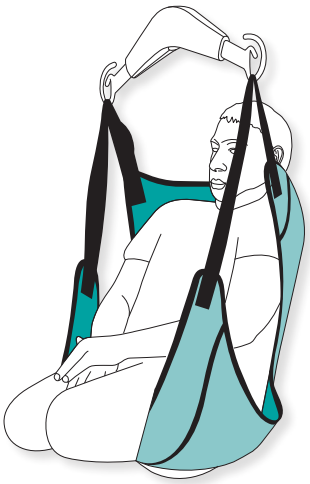

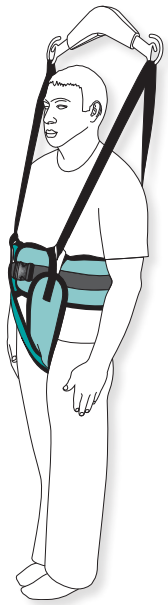

Amputee Sling

Two sizes in fabric or mesh.

- Sling incorporates a head support and commode aperture.
- Recommended for lifting patients with high level amputations.

	M	L
A	860	1050
B	1160	1390
C	190	220
D	170	190
E	650	740
F	1030	1120
FABRIC	A01M	A01L
MESH	A02M	A02L

YOKE ATTACHMENT (SPREADER BAR)

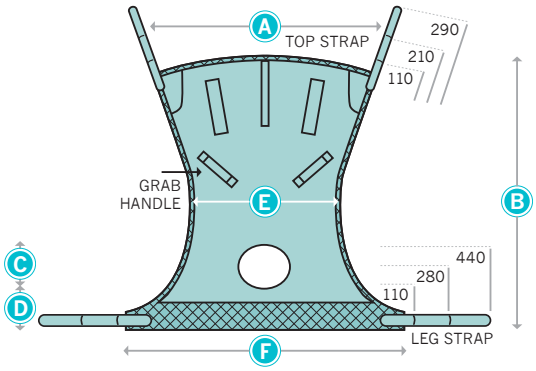

Deluxe Leg Sling

Three sizes in fabric or mesh.

- Provides maximum support to hips and thighs.
- Recommended for patients with compromised hip joints and amputees (subject to assessment).

	S	M	L
A	780	880	1070
B	170	180	180
C	820	920	1010
D	1180	1240	1360
FABRIC	DL01S	DL01M	DL01L
MESH	DL02S	DL02M	DL02L

YOKE ATTACHMENT (SPREADER BAR)

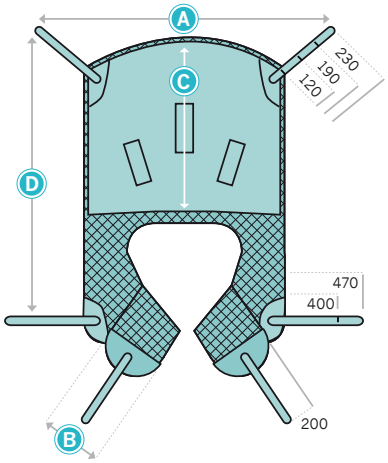

Walking Sling

Three sizes in fully quilted fabric only.

- This sling helps support and assist when walking in the rehabilitation environment.
- Used with Ceiling Track Hoists and compatible Standing Hoists.

	S	M	L
A	880	1060	1230
B	500	660	850
C	240	300	310
D	690	840	1050
FABRIC	W01S	W01M	W01L

YOKE ATTACHMENT (SPREADER BAR)

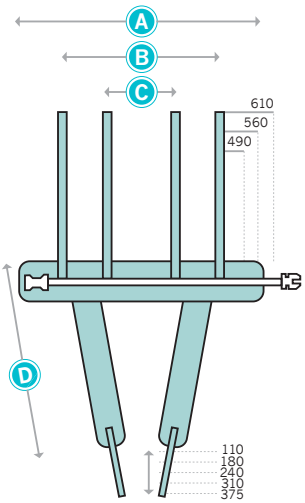

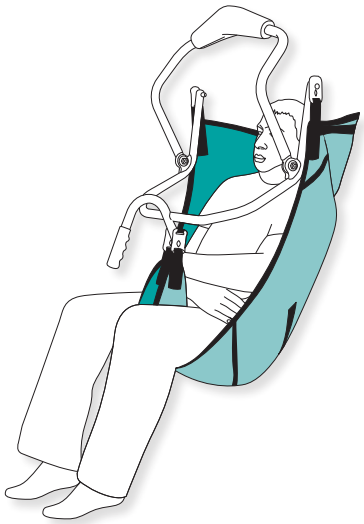

Pivot Sling

Six sizes in fabric or mesh.

- Comfortable, supportive sling with easily defined attachment points.
- Recommended for general lifting especially for the larger patient.
- Angle adjustment via Pivot Frame

	XS	S	M	L	XL	XXL
A	720	870	1000	1080	1170	1320
B	190	230	270	260	270	290
C	580	830	920	1010	1090	1180
D	870	1220	1310	1410	1540	1710
FABRIC	P01XS	P01S	P01M	P01L	P01XL	P01XXL
MESH	P02XS	P02S	P02M	P02L	P02XL	P02XXL

PIVOT FRAME ATTACHMENT (TILT FRAME)

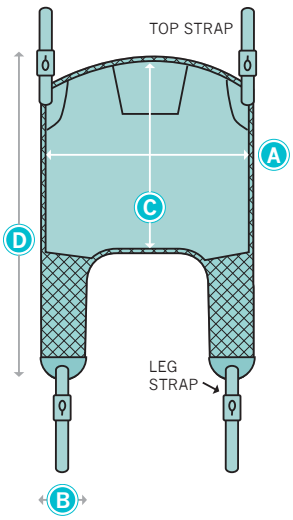

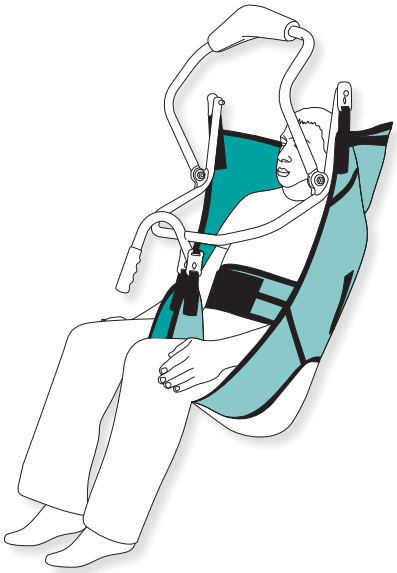

Pivot Care Sling

Six sizes in fabric or mesh.

- Sling provide easy removal of clothing for toilet transfers.
- Recommended for general toilet transfers for the less secure patient.

	XS	S	M	L	XL	XXL
A	680	840	1020	1030	1220	1240
B	170	210	220	220	220	220
C	540	630	700	790	830	820
D	870	1220	1240	1360	1430	1480
T	980	1180	1220	1320	1440	1660
FABRIC	PC01XS	PC01S	PC01M	PC01L	PC01XL	PC01XXL
MESH	PC02XS	PC02S	PC02M	PC02L	PC02XL	PC02XXL

PIVOT FRAME ATTACHMENT (TILT FRAME)

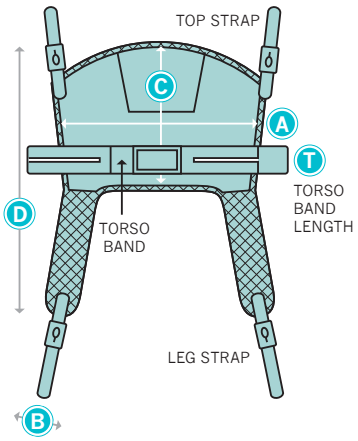

E-Clip

The patented E-clip is offered as an option on all Pivot slings and Standing slings . This revolutionary clip provides a mechanical means of ensuring the correct attachment and removes the possibility of inadvertent detachment of the sling. Depression of the side safety levers is the only way the E-clip can be removed. Visual control offers additional safety and wear over time is eliminated as the E-clip does not require a precisely engineered 'friction fit'. The E-clip is strongly recommended when prescribing our quality slings for use on lifters other than those manufactured by Allegro Concepts.

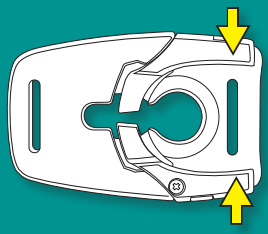

Pivot Slings

Pivot Slings are required for use with Pivot Frame attachments. The slings are manufactured from polyester fabric or mesh (suitable for bathing). These slings allow the patient to be lifted in either a sitting or lying position, ideal for lifting on and off a bed or the floor.

The unique pivot with anti-lock at the end of the boom allows the whole frame to be rocked back and forward to assist correct positioning of the patient. The frame spreads the sling attachment points to ensure the patients hips are not excessively flexed, avoiding the discomfort obese patients sometimes experience with standard slings.

Warning. Pivot Slings must not be used on any attachments other than the Pivot Frame.

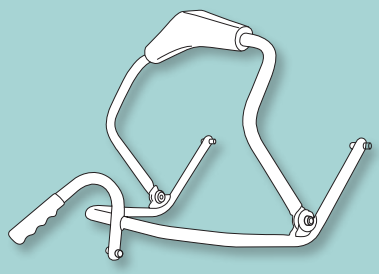

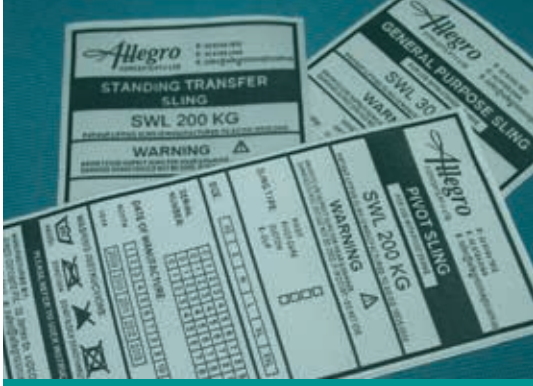

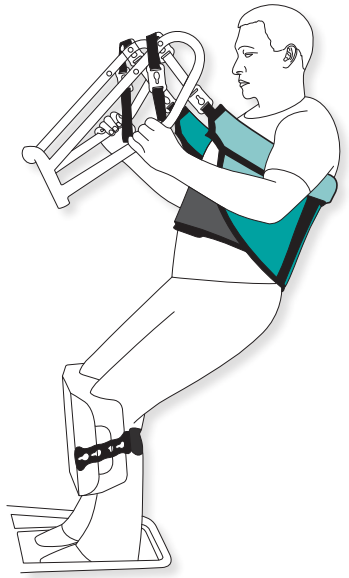

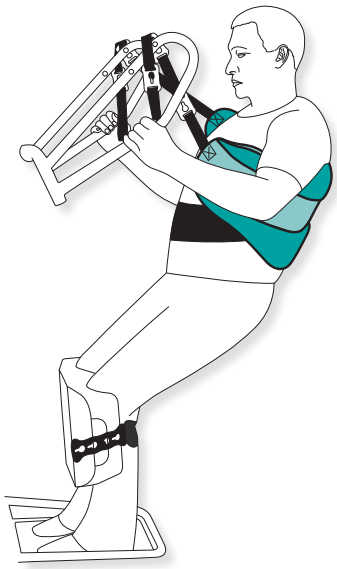

Standing Transfer Sling

Three sizes in fabric only.

- Sling provides easy removal of clothing for toilet transfers.
- Recommended on standing hoists for weight bearing patients only.
- Available with Key-Hole and Loop type attachments.

		M	L	XL
	A	880	1060	1220
	B	290	370	410
	C BUCKLE BELT	960	1020	1220
	C VELCRO BELT	1220	1320	1440
KEY-HOLE ATTACHMENT	BUCKLE BELT	STK03M	STK03L	STK03XL
	VELCRO BELT	STK04M	STK04L	STK04XL
LOOP TYPE ATTACHMENT	BUCKLE BELT	STL03M	STL03L	STL03XL
	VELCRO BELT	STL04M	STL04L	STL04XL

YOKE ATTACHMENT (SPREADER BAR)

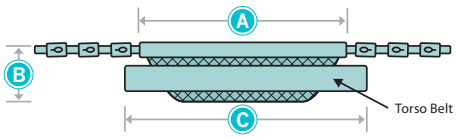

Super Soft Standing Sling

Two sizes in fabric only.

- A softer padded variety of Standing Sling with easy to fit Velcro fastening Neoprene Torso Belt.
- Recommended on Standing Hoists for weight bearing patients only.
- Available with Key-Hole and Loop type attachments.

	M	L
A	920	1100
B	320	320
C NEOPRENE BELT	1250	1500
KEY-HOLE ATTACHMENT	SSK04M	SSK04L
LOOP TYPE ATTACHMENT	SSL04M	SSL04L

YOKE ATTACHMENT (SPREADER BAR)

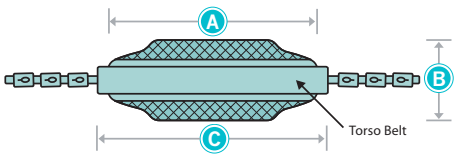

Torso Belt Options

Allegro Standing Slings have the option of both a Buckle and Velcro Fastening Torso Belt. The Buckle Belt is able to be tightened after the patient has stood without the need to release the clasp. It is also a superior option for infection control. The double fastening Velcro Belt is designed as a quicker option for both fitting and removal of the Standing Sling.

Standard lengths

Buckle Belt		Velcro Belt	
S	900mm	XS	980mm
M	960mm	S	1140mm
L	1020mm	M	1220mm
XL	1220mm	L	1320mm
		XL	1440mm
		XXL	1660mm

All widths are 130mm

Standing Transfer Slings

The Standing Transfer sling is designed to support a weight bearing yet less than able person from waist level to mid shoulder whilst allowing free movement of the arms. The patient's hands can reach naturally to grip the lift arms as the patient rises.

The Standing Transfer sling will provide adequate support for the patient who requires only minimal assistance for standing.

A Torso Belt provides added security and prevents the sling from riding up the patient's back when maximum support is required.

The sling has the option of both Key-Hole fastening or Loop type attachments. This adds to the versatility of the sling in any environment.

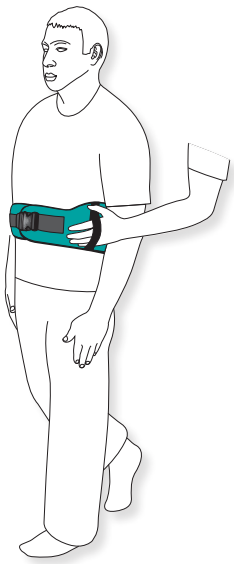

Patient Transfer Belt

Four sizes in fully quilted fabric only.

- Provides patient support and reassurance during manoeuvre.
- Non-slip lining will securely grip patients clothing to prevent riding up.
- Recommended for weight bearing patients only.

	S	M	L	XL
A	860	1010	1150	1250
B	190	190	190	190
FABRIC	PTS	PTM	PTL	PTXL

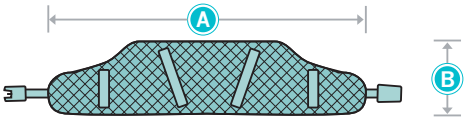

Custom Sling – based on Medium General Purpose Head Support in Mesh.

Example to show ways of customising a sling.

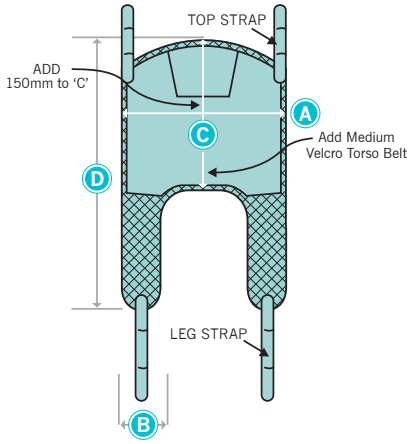

Custom Slings

Custom Slings are a specialty of Allegro Concepts, acknowledging that every individual is unique and different. A standard sling can be modified to include additional loops, straps or padding or a complete new sling can be designed. The trained sewing department review all custom slings to ensure they will achieve the best result possible. All that is required is a pattern or picture of the modification advising as many measurements and specifications as possible. The best results will be achieved by basing your modified sling on our existing templates.

Contact Allegro Concepts for your Custom Sling Design form

Ph - 02 6895 2888

Email – sales@allegroconcepts.com.au

Alternatively, go to our website www.allegroconcepts.com.au to download a form.

Sling Testing

Allegro Slings are manufactured and tested to AS ISO 10535:2011. We also offer a full sling retesting and certification service for continuous quality management systems and auditing purposes.

Woven label

Allegro Concepts slings have a quality woven identification label. This label will not fade over time or from the normal washing process. Important details such as sling description, serial number and date of manufacture are indelibly marked on the label. This is important for both lifetime traceability and auditing processes.

Custom Sling Design Script

Date_____ Therapist_____ Client_____

1- **CHOOSE A BASE SLING DESIGN (recommended) plus your preferred fixing.**

Base Sling Design (loop fixing only)	
General Purpose	
General Purpose Head Support	
Care	
Care Head Support	
Junior	
Amputee	
Deluxe Leg	
Walking	

Base Sling Design		**Loop**	**Clip**	**E-Clip**	**Dual** (Clip)	**Dual** (E-Clip)
Pivot						
Pivot Care						
Standing Transfer						
Super Soft						
Other						

Base Material Type			
Closed Fabric		Open Mesh	

2- **CHOOSE A BASE SLING SIZE.** If you have selected "Other" please provide generic dimensions (A-D) plus any other relevant dimensions in the sketch box provided on the next page

Base Sling Size							
Extra Small		Small		Medium		Large	
X Large		XX Large		Other			

3- **CHOOSE A STANDARD MODIFICATION.**

MOD 001 - add/change torso belt

For standard Torso Belt lengths/widths, please see page 6 of sling brochure.

Torso Belt					
Buckle		Neoprene/Buckle Over		Custom Length	
Velcro		Neoprene/Velcro		Custom Width	
Comment					

MOD 002 - add/reduce head support

Head Support	
Add Head Support	cm
Reduce Head Support	cm

MOD 003 - add/reduce body length

Body Length	
Add Body Length	cm
Reduce Body Length	cm

MOD 004 - add/reduce body width

Body Width	
Add Body Width	cm
Reduce Body Width	cm

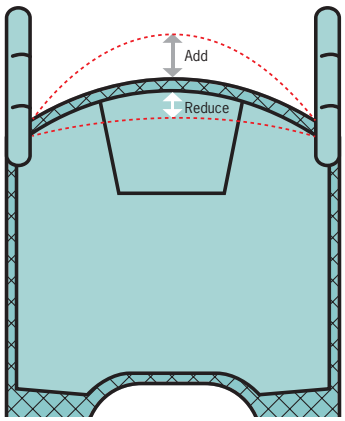

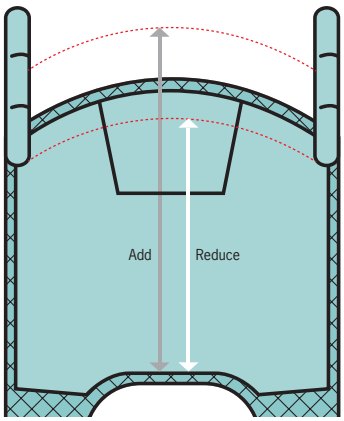

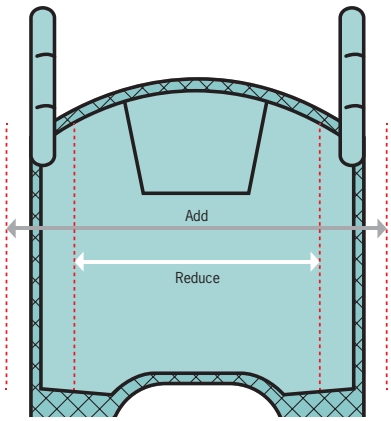

NB - Body width adjustment will not affect generic external profile of sling.

MOD 005 - add/reduce leg length

Leg Length	
Add Leg Length	cm
Reduce Leg Length	cm

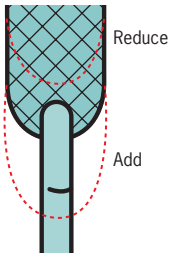

MOD 006 - add/reduce leg width

Leg Width	
Add Leg Width	cm
Reduce Leg Width	cm

NB - Altering of leg width will adjust size of commode aperture.

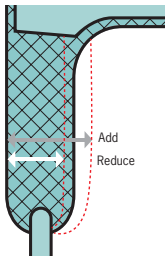

MOD 007 - Add Modesty Strap
Modesty strap keeps legs of sling together without crossing

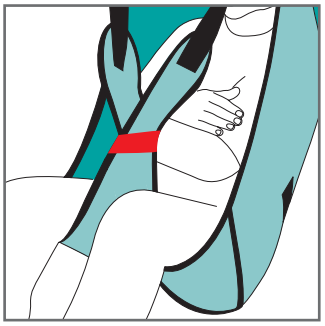

MOD 008 - Care Sling Leg Strap
Assists in support of upper thighs for clients with low tone using Care Slings.

MOD 009 - Stand-up Hemi Band
Supports arm affected by hemiplegia in standing transfer.

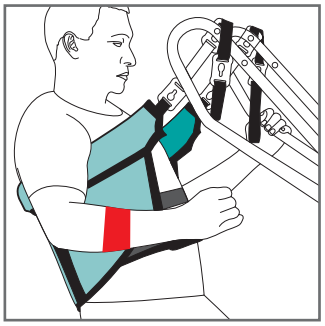

MOD 010 - Stand-up Drop Strap
Assists clients with limited weight bearing in standing transfer

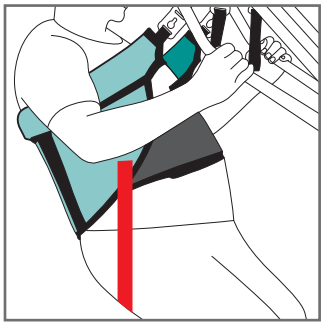

Sling Sketch and Dimensions

A= B= C= D=

Custom modifications
(please include in sketch)

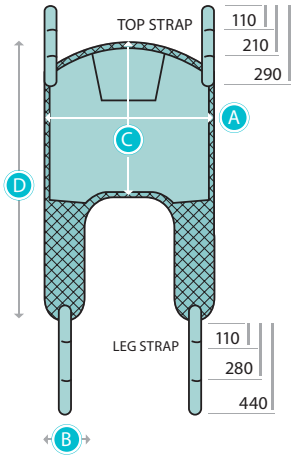

Disclaimer: While Custom Slings are covered by manufacturer's warranty, no responsibility is taken for their suitability and functionality.

Tear along perforated edge

Allegro Concepts Pty Ltd
30-32 James Street Lidcombe NSW 2141
Phone: (02) 9749 7812 Fax (02) 9749 2144
Email: sales@allegroconcepts.com.au

26 Lachlan Street Condobolin NSW 2877
Phone: (02) 6895 2888 Fax (02) 6895 4543
Web: www.allegroconcepts.com.au

Allegro
CONCEPTS PTY LTD
www.allegroconcepts.com.au

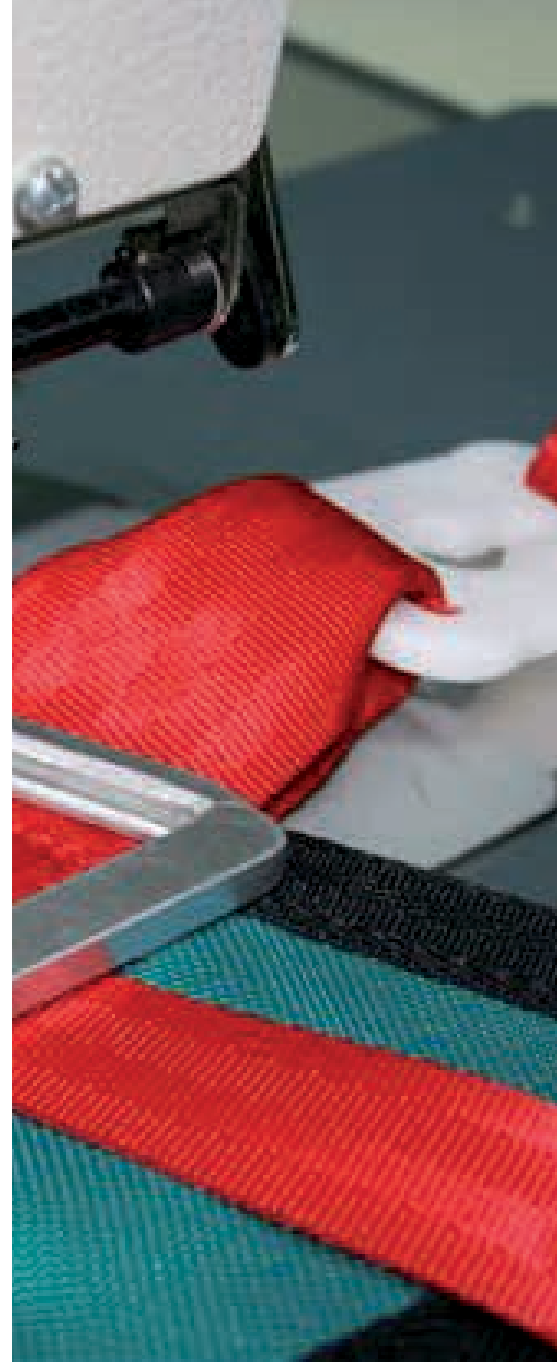

Sydney Office:
30-32 James Street
Lidcombe NSW 2141
Ph: 02 9749 7812
Fax: 02 9749 2144

Condobolin Office:
26 Lachlan Street
Condobolin NSW 2877
Ph: 02 6895 2888
Fax: 02 6895 4543

Email: sales@allegroconcepts.com.au
Website: www.allegroconcepts.com.au

Please contact us for further details on the full range of compatible Allegro Patient Lifting Hoists.

Distributed by

Allegro
CONCEPTS PTY LTD
Manufacturers of Patient Lifting and Handling Equipment